Perceived Customer Value, Customer Confidence, and Purchase Commitment in Online Gold Purchasing among Consumers in Thailand

Atchara Meksuwan*

Received: August 28, 2026, Revised: October 28, 2026, Accepted: October 28, 2026

Abstract

Online gold purchasing has increased the importance of perceived customer value and customer confidence, yet their relationships with purchase commitment remain insufficiently understood. This study examined the relationships among perceived customer value, customer confidence, and purchase commitment and analyzed the direct and indirect effects of perceived customer value on purchase commitment through customer confidence. Data from 383 consumers with online gold purchasing experience in Thailand were analyzed using structural equation modeling. The model demonstrated a satisfactory fit (χ^2 = 5.406, df = 7, p = .611, χ^2/df = .772, GFI = .992, CFI = 1.000, TLI = 1.002, RMSEA = .000). Perceived customer value positively influenced customer confidence and purchase commitment, while customer confidence positively influenced purchase commitment and partially mediated the relationship between perceived customer value and purchase commitment. The model explained 70.8% of the variance in customer confidence and 65.1% in purchase commitment. These findings contribute to understanding customer relationships and purchasing behavior in online gold retailing.

Keywords: Perceived Customer Value; Customer Confidence; Purchase Commitment; Online Gold Purchasing

* Assistant Professor, Faculty of Management Sciences, Lampang Rajabhat University, E-mail: atchara@g.lpru.ac.th

คุณค่าที่ลูกค้ารับรู้ ความเชื่อมั่นของลูกค้า และความมุ่งมั่นในการซื้อทองคำผ่านช่องทางออนไลน์ของผู้บริโภคในประเทศไทย

อัจฉรา เมฆสุวรรณ*

รับบทความ: 28 สิงหาคม 2569, แก้ไขบทความ: 28 ตุลาคม 2569, ตอบรับบทความ: 28 ตุลาคม 2569

บทคัดย่อ

การซื้อทองคำผ่านช่องทางออนไลน์ทำให้คุณค่าที่ลูกค้ารับรู้และความเชื่อมั่นของลูกค้ามีความสำคัญมากขึ้น แต่ความสัมพันธ์ของปัจจัยดังกล่าวกับความมุ่งมั่นในการซื้อยังได้รับการศึกษาอย่างจำกัด การวิจัยนี้มีวัตถุประสงค์เพื่อศึกษาความสัมพันธ์ระหว่างคุณค่าที่ลูกค้ารับรู้ ความเชื่อมั่นของลูกค้าและความมุ่งมั่นในการซื้อ และวิเคราะห์อิทธิพลทางตรงและทางอ้อมของคุณค่าที่ลูกค้ารับรู้ต่อความมุ่งมั่นในการซื้อผ่านความเชื่อมั่นของลูกค้า เก็บข้อมูลจากผู้บริโภคในประเทศไทยที่มีประสบการณ์ซื้อทองคำผ่านช่องทางออนไลน์จำนวน 383 คน วิเคราะห์ด้วยแบบจำลองสมการโครงสร้าง ผลการวิจัยพบว่าแบบจำลองสอดคล้องกับข้อมูลเชิงประจักษ์ (χ^2 = 5.406, df = 7, p = .611, χ^2/df = .772, GFI = .992, CFI = 1.000, TLI = 1.002, RMSEA = .000) คุณค่าที่ลูกค้ารับรู้มีอิทธิพลเชิงบวกต่อความเชื่อมั่นของลูกค้าและความมุ่งมั่นในการซื้อ ขณะที่ความเชื่อมั่นของลูกค้ามีอิทธิพลเชิงบวกต่อความมุ่งมั่นในการซื้อและเป็นตัวแปรส่งผ่านบางส่วน แบบจำลองอธิบายความแปรปรวนของความเชื่อมั่นของลูกค้าได้ร้อยละ 70.8 และความมุ่งมั่นในการซื้อได้ร้อยละ 65.1 ผลการวิจัยช่วยอธิบายความสัมพันธ์กับลูกค้าและพฤติกรรมการซื้อทองคำผ่านช่องทางออนไลน์

คำสำคัญ: คุณค่าที่ลูกค้ารับรู้; ความเชื่อมั่นของลูกค้า; ความมุ่งมั่นในการซื้อ; การซื้อทองคำผ่านช่องทางออนไลน์

* ผู้ช่วยศาสตราจารย์ ดร. คณะวิทยาการจัดการ มหาวิทยาลัยราชภัฏลำปาง, E-mail: atchara@g.lpru.ac.th

Introduction

The expansion of digital commerce has transformed how consumers access information and purchase gold products through online channels. In Thailand, gold retailers increasingly provide mobile applications and official online platforms that enable consumers to purchase various gold products, including jewelry and gold bullion. These channels offer convenient access to product information and purchasing services (Aittipon Neamsawade, 2022). However, online gold purchasing involves uncertainty because consumers may be unable to directly inspect products or verify retailer reliability before completing transactions (Quintus et al., 2024). Consequently, understanding perceived customer value and customer confidence is important for explaining consumers' purchasing-related behavioral orientations in online gold retailing.

Under highly uncertain environments, the Theory of Consumption Values (TCV) by Sheth et al. (1991) remains a fundamental framework for explaining how online purchasing decisions are shaped by multidimensional evaluations of perceived customer value, spanning economic utility, convenience, emotional appeal, and social status (Chakraborty & Dash, 2023; Dilotsotlhe & Duh, 2021). However, in high-value product markets characterized by transaction and delivery risks, perceived customer value may not directly determine purchasing-related behavioral outcomes. Instead, it provides an important foundation for building customer confidence, reducing consumer uncertainty, and establishing psychological assurance during online transactions (Yum & Kim, 2024; Hanaysha et al., 2025; Al Haress & AkhlaghiMofrad, 2026).

In the context of online gold purchasing, where consumers may purchase jewelry or other gold products through digital channels, customer confidence serves as an important psychological mechanism linking perceived value with purchase commitment. This commitment reflects consumers' willingness to continue purchasing from, prefer, and recommend an online gold retailer (Indah & Sukresna, 2025). However, empirical evidence explaining how customer confidence mediates the relationship between perceived customer value and purchase commitment in online gold retailing remains limited.

This study integrates these variables to extend the application of the Theory of Consumption Values (TCV) within the context of online gold retailing. It also provides strategic implications for gold retailers in developing online purchasing channels that strengthen customer confidence and foster purchase commitment. Based on these theoretical and practical considerations, the present study establishes the following research objectives.

Research Objective

1. To examine the relationships among perceived customer value, customer confidence, and purchase commitment in online gold purchasing among consumers in Thailand.

2. To analyze the direct and indirect effects of perceived customer value on purchase commitment through customer confidence.

Literature Review

Theory of Consumption Values (TCV) and Perceived Customer Value

The Theory of Consumption Values (TCV) identifies five consumption values: functional, social, emotional, epistemic, and conditional value (Sheth et al., 1991). However, the relevance of these dimensions may vary across purchasing contexts. This study adopts TCV as a conceptual foundation and operationalizes Perceived Customer Value (PCV) through four dimensions relevant to online gold purchasing: Functional Value, Economic Value, Convenience Value, and Emotional and Social Value. Functional Value reflects perceived product-related benefits, Economic Value concerns monetary benefits, Convenience Value represents the ease of online purchasing, and Emotional and Social Value combines psychological and social evaluations. Economic and Convenience Values are examined separately to distinguish monetary benefits from transaction convenience, while emotional and social evaluations are combined within the measurement framework. Epistemic and Conditional Values are not examined separately. Accordingly, this four-dimensional framework represents a context-specific operationalization of PCV informed by TCV rather than a modification or validation of the original five-dimensional theory (Yum & Kim, 2024; Hanaysha et al., 2025).

Perceived Customer Value and Customer Confidence

Perceived Customer Value (PCV) reflects consumers' overall evaluations of the benefits received from products and services. Favorable value evaluations may contribute to confidence in a retailer's ability to deliver expected benefits. Yum and Kim (2024) found that functional, emotional, and social values were positively related to trust in digital platforms, while Monfort et al. (2025) reported a positive relationship between perceived value and brand trust. Although these studies examined trust rather than Customer Confidence (CC), their findings provide a relevant basis for examining confidence-related evaluations. In online gold purchasing, consumers rely on product information and retailer credibility when evaluating transactions that may not allow direct product inspection. Therefore, higher PCV is expected to be associated with greater CC. Accordingly, the following hypothesis is proposed:

H1: Perceived customer value has a positive effect on customer confidence.

Perceived Customer Value and Purchase Commitment

Perceived Customer Value (PCV) may be associated with consumers' willingness to maintain purchasing relationships with retailers. Hanaysha et al. (2025) reported a positive relationship between perceived value and online customer loyalty, while Al Haress and AkhlaghiMofrad (2026) examined value-related customer relationship outcomes in digital financial services. Although these studies did not directly measure Purchase Commitment (PC) as operationalized in the present study, they provide relevant evidence concerning purchasing-related behavioral orientations. In this study, PC refers to continued purchasing intention, first-choice preference, repeat purchasing, and willingness to recommend an online gold retailer. These indicators overlap with behavioral loyalty and purchase intention and should not be interpreted as evidence of enduring psychological commitment. Consumers who perceive greater overall value from online gold purchasing are therefore expected to report stronger PC. Accordingly, the following hypothesis is proposed:

H2: Perceived customer value has a positive effect on purchase commitment.

Customer Confidence and Purchase Commitment

Customer Confidence (CC) refers to consumers' assessment that an online gold retailer can be relied upon to provide accurate product information, honor stated transaction conditions, fulfill orders as promised, conduct transactions reliably, and resolve purchasing problems appropriately. This operational definition reflects the five CC item domains used in the present study. It is conceptually informed by research on trust and retailer reliability in digital transactions (Yum & Kim, 2024; Al Haress & AkhlaghiMofrad, 2026). The term Customer Confidence is retained to reflect the transaction-related focus of the study's measurement instrument rather than to suggest a construct empirically distinct from trust. Previous research has examined the role of trust in digital customer relationships, providing a related conceptual basis for examining Customer Confidence in online gold purchasing. Accordingly, the following hypothesis is proposed:

H3: Customer Confidence has a positive effect on Purchase Commitment.

The Mediating Role of Customer Confidence

Customer Confidence (CC) may serve as an intervening variable linking Perceived Customer Value (PCV) with Purchase Commitment (PC). In online gold purchasing, favorable value evaluations may be associated with greater confidence in retailer reliability, which, in turn, may be related to consumers' willingness to continue purchasing from the same retailer. Previous research provides mixed evidence concerning similar relationships. Yum and Kim (2024) found that perceived value was positively associated with trust, but trust did not significantly mediate the relationship between perceived value and loyalty in online entertainment platforms. Other studies have reported relationships between perceived value

and customer loyalty or trust-related outcomes in digital services (Hanaysha et al., 2025; Al Haress & AkhlaghiMofrad, 2026). However, these findings do not establish the mediating role of CC in online gold purchasing. Accordingly, the present study examines whether CC statistically mediates the relationship between PCV and PC. The following hypothesis is proposed:

H4: Customer confidence mediates the effect of perceived customer value on purchase commitment.

Based on the proposed hypotheses, Figure 1 presents the conceptual framework of this study.

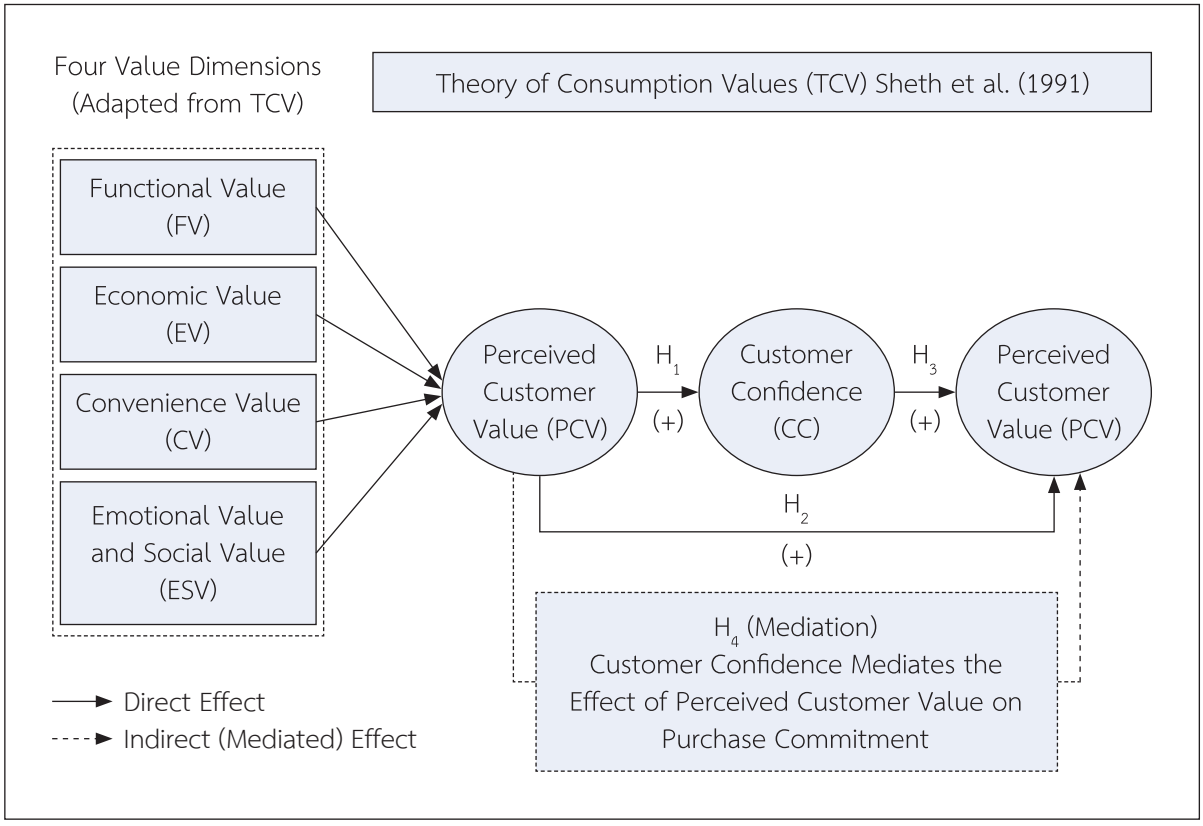

Note: (+) Indicates a Positive Relationship

Figure 1 Research Framework

Research Methods

Sample and Procedure

This study employed a quantitative, cross-sectional survey design. The target population comprised consumers in Thailand who had previously purchased gold products through mobile applications or official online platforms operated by gold retailers. Online gold purchasing was defined as purchasing gold products through these digital channels and was not restricted to gold investment or savings

applications. The study covered seven leading gold retailers: Hua Seng Heng, Yaowarat Bangkok, MTS Gold, Ausiris (Mae Thongsuk), Aurora, Intergold, and YLG Bullion International. Because the exact population size was unknown, sample size adequacy was considered with reference to SEM recommendations by Hair et al. (2019) and Kline (2015). A total of 383 valid questionnaires were obtained, exceeding the commonly recommended minimum of 200 observations. Respondents were recruited using non-probability purposive sampling, with prior experience of online gold purchasing as the eligibility criterion. Consequently, the sample was not statistically representative of all online gold purchasers in Thailand, and the findings should be interpreted within the characteristics of the surveyed respondents.

Instrumentation

A structured questionnaire was developed based on the Theory of Consumption Values (Sheth et al., 1991) and relevant studies of perceived value and customer relationship outcomes (Yum & Kim, 2024; Hanaysha et al., 2025; Monfort et al., 2025; Al Haress & AkhlaghiMofrad, 2026). The instrument comprised demographic and purchasing information, 16 Perceived Customer Value (PCV) items across four dimensions, five Customer Confidence (CC) items, and seven Purchase Commitment (PC) items. All 28 measurement items used a five-point Likert scale (1 = strongly disagree; 5 = strongly agree).

The PCV items covered Functional Value (FV1-FV4: product quality, information usefulness, product consistency, and suitability), Economic Value (EV1-EV4: price appropriateness, price comparison, cost-effectiveness, and monetary value), Convenience Value (CV1-CV4: purchasing convenience, ordering simplicity, time savings, and reduced store visits), and Emotional and Social Value (ESV1-ESV4: satisfaction, enjoyment, positive self-evaluation, and personal image). These dimensions represented a context-specific application of TCV rather than its original five-dimensional structure. The CC items (CC1-CC5) assessed information accuracy, fulfillment of conditions, order fulfillment, transaction reliability, and problem resolution. The PC items (PC1-PC7) assessed repurchase and continued purchasing intentions, first-choice preference, relationship continuation, and willingness to recommend. These item domains were conceptually informed by the cited literature and reflected the operational definitions established in the study.

The questionnaire was administered in Thai. The measurement items were developed with reference to relevant English-language literature and adapted to the context of online gold purchasing in Thailand. The Thai wording was reviewed for its consistency with the operational definitions of the constructs and its appropriateness for the target respondents. Content validity was examined by five experts using the Item-Objective Congruence (IOC) index, with all items obtaining values of at least 0.80. The questionnaire was pilot-tested with 30 respondents to assess item clarity and suitability before the main data collection. The internal consistency of the pilot instrument was assessed using Cronbach's alpha (Cronbach, 1951). The pilot-test results yielded coefficients of 0.747 for Functional Value (FV),

0.819 for Economic Value (EV), 0.871 for Convenience Value (CV), 0.873 for Emotional and Social Value (ESV), 0.945 for overall Perceived Customer Value (PCV), 0.893 for Customer Confidence (CC), and 0.911 for Purchase Commitment (PC). All coefficients exceeded the commonly accepted threshold of 0.70 (Nunnally & Bernstein, 1994), indicating satisfactory internal consistency during the pilot test.

Internal consistency was subsequently reassessed using the main analytical dataset. Cronbach's alpha coefficients were 0.826 for FV, 0.839 for EV, 0.834 for CV, 0.827 for ESV, 0.952 for overall PCV, 0.850 for CC, and 0.904 for PC. Corrected item-total correlations ranged from 0.595 to 0.803. All coefficients exceeded 0.70, supporting satisfactory internal consistency of the measurement scales in the analytical dataset.

Data Collection

Data were collected from January to May 2026 through Google Forms distributed via online gold-related communities and social media channels. Eligibility was confirmed through screening questions requiring previous online gold purchasing experience. Respondents were informed of the study's purpose, voluntary participation, and right to decline before providing consent. Responses were treated confidentially and reported anonymously in aggregate form. A total of 383 completed questionnaires were retained for the study.

Data Analysis

IBM SPSS Statistics and IBM SPSS AMOS were used for descriptive analysis and structural equation modeling (SEM). Measurement quality was evaluated using standardized factor loadings (> 0.50), composite reliability (CR > 0.70), and average variance extracted (AVE > 0.50), following Hair et al. (2019). Discriminant validity was assessed using the Fornell-Larcker criterion (Fornell & Larcker, 1981) and the heterotrait-monotrait ratio (HTMT < 0.90; Henseler et al., 2015). Harman's single-factor test (Podsakoff et al., 2003) indicated that the first factor explained 38.5% of the variance, although this test alone cannot exclude common method bias. SEM was employed to examine relationships among PCV, CC, and PC. Four dimension-level composite scores served as observed indicators of PCV, while CC and PC were represented by observed composite scores. Thus, the structural model was not a full item-level latent-variable model. Model fit was evaluated using χ^2, df, χ^2/df, GFI, CFI, TLI, and RMSEA. Model fit was evaluated using the chi-square statistic (χ^2), degrees of freedom (df), the normed chi-square (χ^2/df), the goodness-of-fit index (GFI), comparative fit index (CFI), Tucker-Lewis index (TLI), normed fit index (NFI), root mean square error of approximation (RMSEA), and root mean square residual (RMR). Model fit was assessed by considering these indices collectively rather than relying on a single cutoff value, following the general recommendations of Hair et al. (2019). RMR was reported as an unstandardized residual index and was not interpreted as the standardized root mean square residual (SRMR).

Results

The study included 383 consumers with online gold purchasing experience in Thailand. The demographic characteristics of the respondents, including gender, age, educational attainment, occupation, and region of residence, are presented in Table 1.

Table 1 Demographic Characteristics of Respondents (n = 383)

Characteristics	Frequency (n)	Percentage (%)
Gender		
Male	64	16.70
Female	319	83.30
Age		
Below 20 years	5	1.30
21-25 years	3	0.80
26-30 years	100	26.00
31-35 years	74	19.30
36-40 years	76	19.90
41-45 years	77	20.10
46-50 years	31	8.10
51 years and above	17	4.50
Educational Attainment		
Below Bachelor's Degree	58	15.10
Bachelor's Degree	320	83.60
Above Bachelor's Degree	5	1.30
Occupation		
Student	88	23.00
Self-Employed	96	25.10
Government/State Enterprise Employee	19	5.00
Private-Sector Employee	132	34.50
General Wage Worker	48	12.50

Table 1 Demographic Characteristics of Respondents (n = 383) (Continue)

Characteristics	Frequency (n)	Percentage (%)
Region of Residence		
Northern Thailand	194	50.70
Central Thailand	110	28.70
Northeastern Thailand	38	9.90
Southern Thailand	27	7.00
Western Thailand	5	1.30
Eastern Thailand	9	2.30

As shown in Table 1, most respondents were female (83.30%) and held a bachelor's degree (83.60%). The largest age group was 26-30 years (26.10%), followed by 41-45 years (20.10%). Private-sector employees represented the largest occupational group (34.50%), while approximately half of the respondents resided in Northern Thailand (50.70%). The online gold purchasing characteristics of the respondents, including preferred retailers, types of gold products purchased, reasons for purchasing online, and payment methods, are presented in Table 2.

Table 2 Online Gold Purchasing Characteristics of Respondents (n = 383)

Characteristics	Frequency (n)	Percentage (%)
Preferred Online Gold Retailer		
MTS Gold	34	8.90
Hua Seng Heng	17	4.40
GCAP	17	4.40
YLG	7	1.80
AUSIRIS	26	6.80
AURORA	119	31.10
Yaowarat Gold Shop	163	42.60

Table 2 Online Gold Purchasing Characteristics of Respondents (n = 383) (Continue)

Characteristics	Frequency (n)	Percentage (%)
Type of Gold Product Purchased		
Necklace	139	36.30
Gold Bullion	17	4.40
Earrings	16	4.20
Pendant	7	1.80
Pixiu Gold Ornament	10	2.60
Ring	146	38.10
Bracelet	38	9.90
Gold Sheet	7	1.80
Others	3	0.80
Reasons for Purchasing Online Gold		
Wide Product Variety	318	83.00
Clear Product Information	271	70.80
Recommendations from Friends or Relatives	158	41.30
Credit Card Payment Availability	180	47.00
Payment Method		
Mobile Banking Transfer	256	66.80
Credit Card	124	32.40
Others	3	0.80
Total	**383**	**100.00**

Note: Multiple responses were permitted for reasons for purchasing online gold; therefore, percentages in this category do not sum to 100%.

As shown in Table 2, Yaowarat Gold Shop (42.60%) and AURORA (31.10%) were the most frequently selected online gold retailers. Rings (38.10%) and necklaces (36.30%) were the most purchased products. The most frequently reported reasons for purchasing online gold were wide product variety (83.00%) and clear product information (70.80%). Mobile banking transfer was the most used payment method (66.80%).

The descriptive results indicated relatively high evaluations across the study constructs. Economic Value (EV) and Emotional and Social Value (ESV) had the highest mean scores (M = 4.11, SD = 0.676 and M = 4.11, SD = 0.665, respectively), followed by Functional Value (FV; M = 4.06, SD = 0.652) and Convenience Value (CV; M = 4.03, SD = 0.669). Overall Perceived Customer Value (PCV) had a mean of 4.07 (SD = 0.623). Customer Confidence (CC) had a mean of 3.98 (SD = 0.657), while Purchase Commitment (PC) had a mean of 3.92 (SD = 0.620). These descriptive findings reflect respondents' generally favorable evaluations of online gold purchasing, although the mean scores alone do not establish differences in the structural effects of individual value dimensions.

Measurement quality was assessed using standardized factor loadings, average variance extracted (AVE), and composite reliability (CR). The reported item loadings exceeded 0.50. The AVE and CR values were 0.545 and 0.827 for FV, 0.562 and 0.836 for EV, 0.557 and 0.834 for CV, 0.545 and 0.827 for ESV, 0.507 and 0.832 for CC, and 0.584 and 0.907 for PC, respectively. All AVE values exceeded 0.50, and all CR values exceeded 0.70, supporting convergent validity and composite reliability. Discriminant validity was further assessed using HTMT. The values ranged from 0.782 to 0.813, all below the recommended threshold of 0.90, supporting discriminant validity among the examined constructs. The internal consistency results were further supported by Cronbach's alpha coefficients ranging from 0.826 to 0.952 across the measurement scales in the analytical dataset. These findings complemented the composite reliability (CR) estimates and provided additional evidence of satisfactory measurement reliability.

The structural model demonstrated an acceptable fit to the data (χ^2 = 5.406, df = 7, p = .611, χ^2/df = 0.772, GFI = 0.992, CFI = 1.000, TLI = 1.002, NFI = 0.996, RMSEA = 0.000, and RMR = 0.003). The fit indices were considered collectively, with RMR interpreted as an unstandardized residual index rather than SRMR. The reported TLI value slightly exceeded 1.000, which can occur when the model chi-square is smaller than its degrees of freedom. The estimated model contained six observed variables and 14 freely estimated parameters, resulting in seven degrees of freedom (21 distinct sample moments minus 14 estimated parameters). The additional parameter was a freely estimated covariance between the residual terms of Emotional and Social Value (ESV; e1) and Customer Confidence (CC; e5), with an unstandardized estimate of 0.038 (S.E. = 0.009, C.R. = 4.074, p < .001). This residual covariance may reflect shared affective or relational aspects of consumers' evaluations that are not fully captured by the specified structural relationships. However, this interpretation is tentative and does not establish a separate causal mechanism. In this specification, PCV was modeled as a latent construct represented by four dimension-level indicators, whereas CC and PC were treated as observed composite variables. Thus, the results describe the fit of this composite-based structural model rather than a full item-level latent-variable model. The standardized structural model is presented in Figure 2.

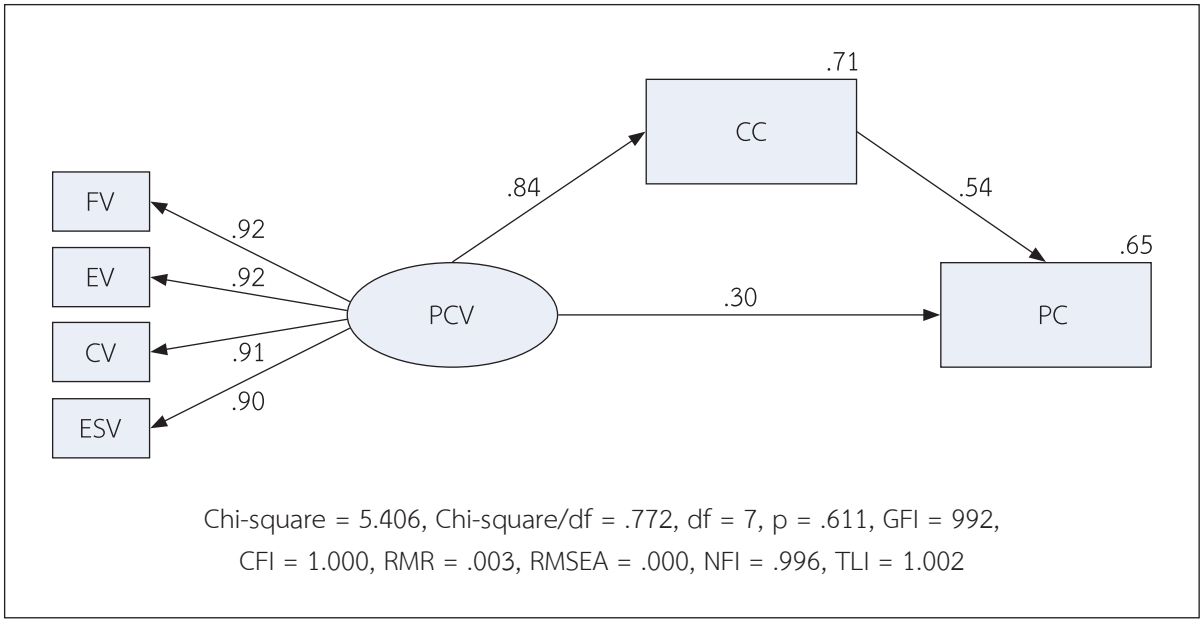

Figure 2 Structural Model with Standardized Path Coefficients

Figure 2. Standardized structural model of Perceived Customer Value, Customer Confidence, and Purchase Commitment. The curved path between e1 (ESV) and e5 (CC) represents the estimated residual covariance.

The structural relationships among Perceived Customer Value (PCV), Customer Confidence (CC), and Purchase Commitment (PC) were examined using structural equation modeling. The results of hypothesis testing and the estimated structural effects are summarized in Table 3.

Table 3 Summary of Hypotheses Testing Results and Structural Effects

Hypotheses/Paths	Unstandardized (B)	S.E.	C.R.	Standardized (β)	p-value	Result
Direct Effects						
H_1: PCV --> CC	0.923	0.041	22.367	0.841	***	Supported
H_2: PCV --> PC	0.311	0.084	3.704	0.300	***	Supported
H_3: CC --> PC	0.509	0.074	6.839	0.539	***	Supported
Indirect Effect						
H_4: PCV --> CC --> PC	0.470	0.076	-	0.453	***	Supported

Table 3 Summary of Hypotheses Testing Results and Structural Effects (Continue)

Hypotheses/Paths	Unstandardized (B)	S.E.	C.R.	Standardized (β)	p-value	Result
Total Effect						
PCV --> PC	0.780	0.059	-	0.753	***	Supported
Squared Multiple Correlations (R^2)						
Endogenous Construct					R^2	
Customer Confidence (CC)					0.708	
Purchase Commitment (PC)					0.651	

Notes: *** $p < .001$

To address the first research objective, the relationships among Perceived Customer Value (PCV), Customer Confidence (CC), and Purchase Commitment (PC) were examined through the structural paths specified in H1-H3. All three estimated paths were positive and statistically significant: PCV was associated with CC ($\beta = 0.841$, $p < .001$; H1), PCV with PC ($\beta = 0.300$, $p < .001$; H2), and CC with PC ($\beta = 0.539$, $p < .001$; H3).

To address the second research objective, the direct and indirect effects of Perceived Customer Value on Purchase Commitment through Customer Confidence were examined using bias-corrected bootstrapping with 5,000 resamples. The standardized indirect effect was 0.453, while the direct effect remained positive at 0.300. These findings are consistent with partial statistical mediation, although the cross-sectional design does not establish a causal sequence.

Regarding explanatory power, the model accounted for 70.8% of the variance in Customer Confidence ($R^2 = 0.708$) and 65.1% of the variance in Purchase Commitment ($R^2 = 0.651$). These values indicate substantial explained variance within the estimated model, although they do not establish predictive performance in other populations or causal effects. The bias-corrected bootstrap results further indicated a positive indirect association between PCV and PC through CC (standardized indirect effect = 0.453, 95% BC CI [0.329, 0.610]). The standardized total effect was 0.753 (95% BC CI [0.669, 0.815]). Both confidence intervals excluded zero, providing statistical support for the indirect and total associations. As the direct association between PCV and PC also remained statistically significant, the findings were consistent with partial statistical mediation. Nevertheless, these results should not be interpreted as establishing causal mediation because the data were collected at a single point in time.

Discussion

The positive relationship between Perceived Customer Value (PCV) and Customer Confidence (CC) (β = 0.841) supports H1, indicating that consumers who perceive greater overall value in online gold purchasing tend to report stronger confidence in retailers. This finding is relevant to online transactions, where consumers evaluate product information, purchasing conditions, and retailer reliability without necessarily inspecting products beforehand. Consistent with the Theory of Consumption Values (Sheth et al., 1991), perceived value encompasses multiple considerations beyond economic benefits. However, the four-dimensional PCV specification used in this study represents a context-specific adaptation rather than a replication of the original five-dimensional framework. This result aligns with previous research associating perceived value with trust-related evaluations in digital environments (Yum & Kim, 2024; Al Haress & AkhlaghiMofrad, 2026). Nevertheless, those studies examined trust, whereas the present study measured Customer Confidence. Their findings therefore provide conceptual support without establishing that confidence and trust are empirically distinct constructs.

The positive relationship between PCV and Purchase Commitment (PC) (β = 0.300) supports H2, suggesting that favorable value evaluations are associated with continued purchasing intentions, retailer preference, repeat-purchase intentions, and willingness to recommend. This finding is consistent with Hanaysha et al. (2025), who linked perceived value to favorable customer relationship outcomes in online retailing. Although Economic Value and Emotional and Social Value received the highest descriptive mean scores, the model assessed overall PCV rather than the separate structural effects of its dimensions. Consequently, these descriptive results do not establish which dimension has the strongest relationship with PC.

The positive association between CC and PC (β = 0.539) supports H3, indicating that consumers reporting greater confidence in online gold retailers also express stronger purchasing-related behavioral intentions. Confidence in product information, transaction conditions, and purchase fulfillment is particularly relevant when transactions occur without direct product inspection. This finding is broadly consistent with studies linking trust-related evaluations to customer relationship outcomes in digital settings (Yum & Kim, 2024; Al Haress & AkhlaghiMofrad, 2026). However, the present findings concern confidence-related evaluations and do not establish effects on perceived risk or actual purchasing behavior.

H4 was supported, with Customer Confidence (CC) partially mediating the statistical relationship between Perceived Customer Value (PCV) and Purchase Commitment (PC). The standardized indirect effect (β = 0.453) exceeded the direct effect (β = 0.300), suggesting that the pathway through CC accounted for a substantial component of the observed association. This finding contrasts with Yum and Kim (2024), who reported that trust did not significantly mediate the relationship between perceived

value and customer loyalty in online entertainment platforms. One possible explanation concerns the characteristics of online gold purchasing, where consumers purchase relatively high-value products and may be unable to physically inspect them before completing transactions. Under these conditions, confidence in the accuracy of product information, transparency of transaction conditions, reliable order fulfillment, and the retailer's ability to resolve purchasing problems may be particularly relevant to consumers' willingness to continue purchasing from the same retailer. By comparison, the relationships among perceived value, trust, and loyalty in online entertainment platforms may operate differently because the nature of the products, transaction conditions, and consumer expectations differs. Importantly, Yum and Kim (2024) examined trust and customer loyalty, whereas the present study measured transaction-related Customer Confidence and Purchase Commitment. These differences in construct operationalization and research context may contribute to the contrasting mediation findings. However, because the two contexts were not directly compared, the present study cannot establish that product characteristics or transaction risks caused the difference. Furthermore, the cross-sectional design supports an interpretation of partial statistical mediation rather than a confirmed causal mechanism.

The theoretical contribution of this study lies in applying a context-specific four-dimensional representation of PCV, comprising Functional Value, Economic Value, Convenience Value, and Emotional and Social Value, to online gold purchasing in Thailand. The findings extend the application of consumption value theory by demonstrating positive relationships among overall PCV, CC, and PC, including the statistical mediating role of CC. However, the adapted framework was not compared directly with the original five-dimensional TCV model, and the relative structural contributions of individual value dimensions were not estimated. Furthermore, PC reflects purchasing-related behavioral orientations rather than enduring psychological commitment. These distinctions clarify the theoretical scope of the findings without extending their interpretation beyond the measured constructs.

Conclusion and Recommendations

This study examined the relationships among Perceived Customer Value (PCV), Customer Confidence (CC), and Purchase Commitment (PC) among 383 online gold purchasers in Thailand. The findings supported all three hypothesized positive relationships and indicated partial statistical mediation through CC. The study contributes to understanding online gold purchasing by applying a context-specific four-dimensional representation of perceived value and highlighting the roles of PCV and CC in purchasing-related behavioral intentions. However, the findings reflect the surveyed respondents and measured constructs and should not be interpreted as evidence of causality or actual long-term purchasing behavior.

Managerial Implications

The positive relationships among perceived customer value (PCV), customer confidence (CC), and purchase commitment (PC) suggest that online gold retailers should integrate value creation and customer confidence into their relationship management strategies. Managers should emphasize transparent transaction conditions, purchasing convenience, and consistent service delivery to support favorable customer evaluations and continued purchasing intentions. Although Economic Value received one of the highest descriptive mean scores, the study did not estimate the separate structural effects of the four value dimensions. Therefore, the findings support a balanced managerial approach rather than prioritizing any single dimension.

Practical Recommendations

Online gold retailers should emphasize clear product information, including gold purity, pricing, payment conditions, and delivery arrangements, to help consumers assess perceived value. Convenient purchasing procedures, consistent communication, and timely responses to customer inquiries may also support customer confidence. These recommendations are based on the observed relationships between perceived customer value and customer confidence rather than direct tests of individual retail practices. Accordingly, specific technological solutions should not be regarded as empirically validated by this study.

Limitations

Several limitations should be considered when interpreting the findings. First, the use of non-probability purposive sampling and online data collection limits generalizability. Although the study included 383 respondents, the concentration of participants in Northern Thailand and the high proportion of female respondents (83.4%) may limit the generalizability of the findings to the broader population of online gold purchasers in Thailand. Second, the frequent purchases of rings and necklaces indicate that the findings largely reflect online gold retailing, including jewelry, rather than exclusively gold investment or savings applications. Third, the cross-sectional design prevents causal inference and cannot rule out reverse or reciprocal relationships among the study constructs. Fourth, reliance on self-reported data from a single source may introduce common method bias. Although Harman's single-factor test showed that the first factor explained 38.5% of the variance, this result does not eliminate such concerns. Fifth, the structural model employed dimension-level indicators for PCV and observed composite scores for CC and PC, limiting the explicit consideration of measurement error in the latter constructs. Finally, the analysis assessed overall PCV without estimating the separate structural effects of its four dimensions. Consequently, their relative contributions cannot be determined. Purchase Commitment was also measured through purchasing-related behavioral orientations rather than actual repeat purchases or enduring psychological commitment.

Future Research Recommendations

Future research should employ appropriate probability-based sampling methods, consider a more balanced gender distribution, and include more geographically diverse respondents to improve representativeness. Comparative studies between gold jewelry purchasers and users of gold investment or savings applications could identify differences across purchasing purposes. Longitudinal studies should examine changes in perceived customer value, customer confidence, and purchasing-related behavioral orientations over time, including actual repeat-purchase behavior and alternative directions of association. Further research should investigate the individual relationships of Functional Value, Economic Value, Convenience Value, and Emotional and Social Value with customer confidence and purchasing-related outcomes. Comparing these dimensions with the original Theory of Consumption Values framework could provide a clearer understanding of their relative contributions. Finally, future studies should examine the conceptual and empirical distinctions between customer confidence and trust, as well as purchase commitment, customer loyalty, and repurchase intention. More comprehensive measurement models, relevant control variables, and additional procedures for assessing common method bias could strengthen the robustness of future findings.

References

Aittipon Neamsawade. (2022, May 12). *Chaoluek App "GOLD NOW" An Online Gold Trading Platform with Real-Time Transactions.* Marketeer Online. https://marketeeronline.co/archives/256639

Al Haress, R., & AkhlaghiMofrad, A. (2026). From perceived value to advocacy: How customer experience, loyalty, and trust shape sustainable mobile payment consumption. *Sustainability, 18*(11), 5225. https://doi.org/10.3390/su18115225

Chakraborty, D., & Dash, G. (2023). Using the consumption values to investigate consumer purchase intentions towards natural food products. *British Food Journal, 125*(2), 551-569. https://doi.org/10.1108/BFJ-12-2021-1334

Cronbach, L. J. (1951). Coefficient alpha and the internal structure of tests. *Psychometrika, 16,* 297-334. https://doi.org/10.1007/BF02310555

Dilotsotlhe, N., & Duh, H. I. (2021). Drivers of middle-class 'consumers' green appliance attitude and purchase behavior: A multi-theory application. *Social Marketing Quarterly, 27*(2), 150-171. https://doi.org/10.1177/15245004211013737

Fornell, C., & Larcker, D. F. (1981). Evaluating structural equation models with unobservable variables and measurement error. *Journal of Marketing Research, 18*(1), 39-50. https://doi.org/10.1177/002224378101800104

Hair, J. F., Black, W. C., Babin, B. J., & Anderson, R. E. (2019). *Multivariate Data Analysis* (8th ed.). Cengage Learning.

Hanaysha, J. R., Shriedeh, F. B., & Gulseven, O. (2025). Impact of website quality, product assortment, customer reviews, and perceived service quality on online loyalty: The role of perceived value as a mediator. *Cogent Business & Management, 12*(1), 2433706. https://doi.org/10.1080/23311975.2024.2433706

Henseler, J., Ringle, C. M., & Sarstedt, M. (2015). A new criterion for assessing discriminant validity in variance-based structural equation modeling. *Journal of the Academy of Marketing Science, 43,* 115-135. https://doi.org/10.1007/s11747-014-0403-8

Indah, G. H. N., & Sukresna, I. M. (2025). Consumer trust in digital business: A systematic review. *International Seminar, 7,* 615-630.

Kline, R. B. (2015). *Principles and Practice of Structural Equation Modeling* (4th ed.). Guilford Press.

Monfort, A., López-Vázquez, B., & Sebastian-Morillas, A. (2025). Building trust in sustainable brands: Revisiting perceived value, satisfaction, customer service, and brand image. *Sustainable Technology and Entrepreneurship, 4*(3), 100105. https://doi.org/10.1016/j.stae.2025.100105

Nunnally, J. C., & Bernstein, I. H. (1994). *Psychometric Theory* (3rd ed.). McGraw-Hill.

Podsakoff, P. M., MacKenzie, S. B., Lee, J.-Y., & Podsakoff, N. P. (2003). Common method biases in behavioral research: A critical review of the literature and recommended remedies. *Journal of Applied Psychology, 88*(5), 879-903. https://doi.org/10.1037/0021-9010.88.5.879

Quintus, M., Mayr, K., Hofer, K. M., & Chiu, Y. T. (2024). Managing consumer trust in e-commerce: Evidence from advanced versus emerging markets. *International Journal of Retail & Distribution Management, 52*(10-11), 1038-1056. https://doi.org/10.1108/IJRDM-10-2023-0609

Sheth, J. N., Newman, B. I., & Gross, B. L. (1991). Why we buy what we buy: A theory of consumption values. *Journal of Business Research, 22*(2), 159-170. https://doi.org/10.1016/0148-2963(91)90050-8

Yum, K., & Kim, J. (2024). The influence of perceived value, customer satisfaction, and trust on loyalty in entertainment platforms. *Applied Sciences, 14*(13), 5763. https://doi.org/10.3390/app14135763